- **Installation and wiring of luminaire must be in accordance with all applicabie local codes.**
- **Installation,inspection,and maintenance of luminaires should be performed by a qualified electrician.**
- **DO NOT make or alter any open holes in the luminaire Do not modify the luminaire.**
- **DO NOT install damaged product.**
- **Make sure electrical power is OFF before and during installation and maintenance.**
- **Make sure the equipment is properly grounded.**
- **Make sure the supply voltage is same as the rated fixture voltage.**

STEP 1

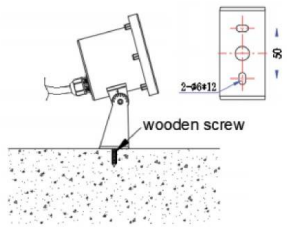

Drill two holes on the wall or floor according to the hole position of the support, and put rubber plugs or wood blocks into the holes, use wood screws to fix the lamp on the wall or floor.

STEP 2

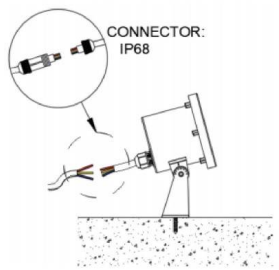

Put the power cord and the power cord of the lamp into the IP68 waterproof connector.

STEP 3

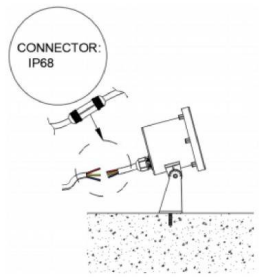

Connect the power cord with the power cord of the lamp, and then lock the waterproof connector.

STEP 4

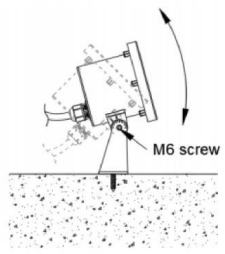

Loosen the M6 screw of the support, adjust the Y axis angle of the lamp and then lock the screw.
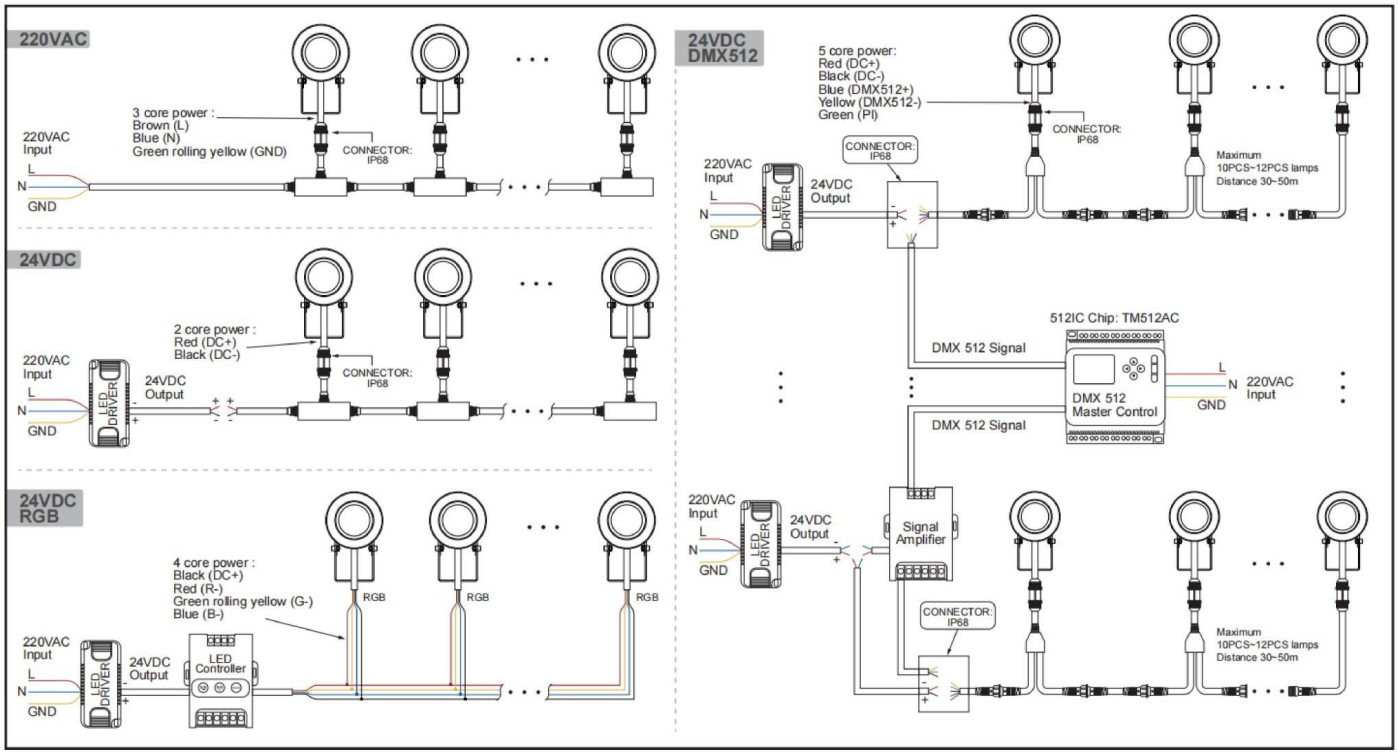
CONNECTION DIAGRAM